MULTI-VENDOR MERGING UNITS APPLIED TO A TRANSFORMER PROTECTION ELEMENT, AND THE IMPACT OF TIME SYNCHRONIZATION LOSS

Marcos Velázquez Lechuga

Doble Engineering

ABSTRACT

Testing of a power transformer protection scheme (ANSI 87T) is crucial to guarantee its proper operation. In a digital substation, merging units (MUs) are a key component as well as a common time reference; typically, MUs from the same brand are used. Talking about Intelligent Electronic Device (IED) interoperability, MUs from different manufacturers are possible.

This paper will present challenges in interoperability, the use of MUs from different manufacturers like sampling alignment in an 87T protection scheme. This paper will also present an explanation of the impact of loss time synchronization in which IEDs may detect misalignment as a fault, so a robust time synchronization mechanism is essential in multi-vendors to maintain protection integrity.

INTRODUCTION

A power transformer is the most critical component within a substation. Protecting it is essential for maintaining the safety and reliability of the electrical power system. Recent developments in communication protocols have introduced innovative approaches that significantly improve the effectiveness of a transformer protection scheme.

As technology rapidly evolves and substations become increasingly complex, IEC 61850-based communication has demonstrated superior speed and reliability compared to traditional hardwired signals. Digitalization within power systems is being deployed at the site of the MUs, which are responsible for converting analog values into digital data packets: called Sampled Value (SV).

In substations equipped with various IEDs, a common time synchronization across all devices is crucial. This synchronization ensures accurate alignment of events, reports, and files, and is especially critical for the sampling of data from the different MUs. Failure to maintain proper time synchronization can result in phase shifts and potentially lead to operational errors.

Implementing the IEC 61850 standard fosters interoperability at both the device (IED) and system levels. Real-time communication between multivendor devices does not only reduce engineering effort but also lowers maintenance costs.

A fully digital substation offers enhanced opportunities for running multiple applications over a unified infrastructure. This allows support for a seamless integration of multi-vendor solutions, through standardization and improved interoperability.

CURRENT DIFFERENTIAL PROTECTION

The UR-T60 microprocessor-based relay is commonly used for a current differential protection scheme. It protects the power transformer from internal faults. The principal of operation of the differential protection scheme is based on the current difference comparison between the current that is getting into the power transformer and leaving the power transformer. The current measurements are made by current transformers (CTs) as shown in Figure 1.

©2026 Doble Engineering, A Doble-Megger Company — 93rd International Conference of Doble Clients
All Rights Reserved

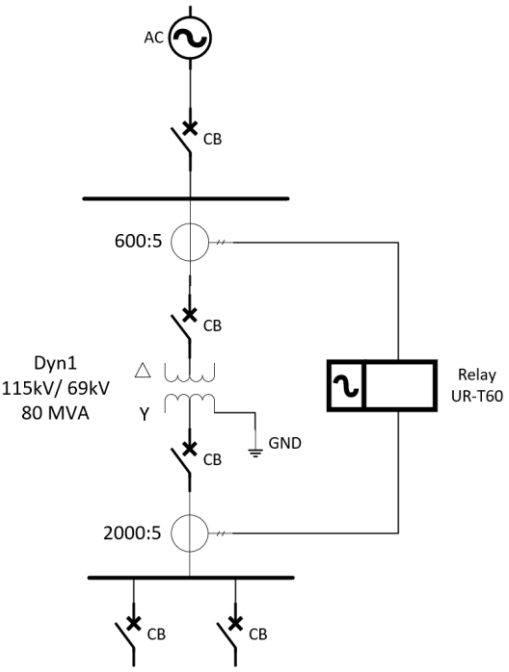

Traditional Analog Transformer Differential Scheme
Figure 1

Similar to other microprocessor-based relays, the 87T relay's signal processing uses filtering techniques and phasor estimation. Once the current phasors are calculated, they are compensated prior to the two principal quantities calculated on the 87T function: Differential current (I_d) and Restraint current (I_r). The majority of 87T relays use a percentage characteristic to compare I_d and I_r. It helps with the identification of faults within the designated protection zone.

The key process requires adjusting the current by compensating for its magnitude, phase angle, and optionally removing the zero-sequence component. While relays may handle this in various ways, the goal remains to ensure that no differential current is present during normal operation.

The benefits of digital relays rely on correct protection settings calculations. In practice, mis-operations due to setting errors still occur. Minimizing human error is a key challenge.

In the case of 87T relay, the typical setting error is associated with incorrect current compensation. Most relays' 87T function is on a per-phase basis. Using phase-A as an example, the relay will see the following currents under nominal load condition.

$$IH_{nominal} = \frac{80MVA}{\sqrt{3}*115kV} * \frac{5}{600} = 3.33$$

$$IL_{nominal} = \frac{80MVA}{\sqrt{3}*69kV} * \frac{5}{2000} = 1.67$$

Where 'H' and 'L' represent the high and low voltage side of the power transformer respectively. Regardless of which magnitude compensation method is used, under load or external fault condition, the differential current should be close to zero.

The GE UR-T60 relay calculates the I_d as a vector sum of currents from all windings. This is after magnitude and angle compensation.

$$I_d = \underrightarrow{I_{1_{comp}}} + \underrightarrow{I_{2_{comp}}}$$

The restraint current is determined by the maximum of the same internally compensated currents.

©2026 Doble Engineering, A Doble-Megger Company — 93rd International Conference of Doble Clients
All Rights Reserved

$$I_r = K\ x \max\ (\left|\overrightarrow{I_{1_{comp}}}\right|, \left|\overrightarrow{I_{2_{comp}}}\right|)$$

The element operates if I_d > PKP and I_d / I_r > K, where PKP represents the percentage differential setting and K is a restrain factor defined by the relay settings Slope 1, Slope 2, and a transition area between breakpoint 1 and breakpoint 2 settings.

The percent differential element is found on a configurable dual-breakpoint/dual-slope differential restraint characteristic. The characteristic's purpose is to determine the differential / restraint ratio for the transformer winding currents under various load and fault conditions. In this manner, it effectively differentiates between external and internal faults, as shown in figure 2.

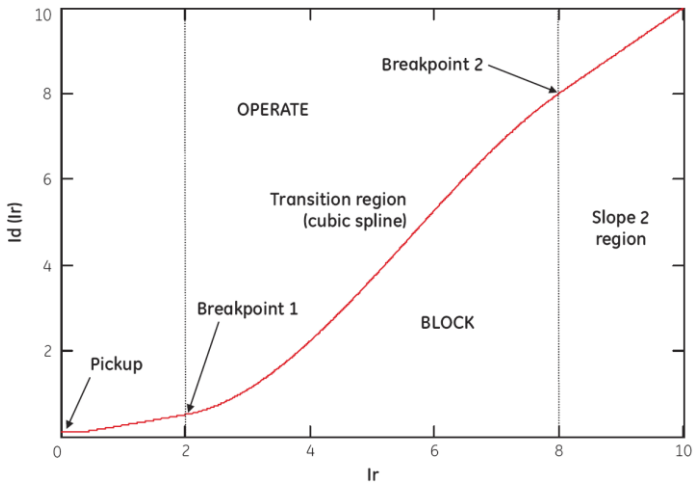

Percent Differential Operating Characteristics [1]
Figure 2

Increased differential current may occur during load or external fault conditions due to current imbalance among transformer windings, which can be attributed to the following factors:

- Inherent CT inaccuracies
- Onload tap changer operation
- CT saturation

The onload tap changer operation adjusts the transformer ratio, and as a result, the winding currents.

To enhance security during CT saturation conditions and to simplify the CT requirements, the 87T includes a specialized CT saturation detection mechanism. If CT saturation is detected, the percent differential is immediately blocked by the directional element. This is to operate without delays if the fault transitions from external to internal. A directional element supervision is not applied if no CT saturation is detected.

The CT saturation detector is a fundamental component of the transformer percent differential element. It does not have any settings associated with it but utilizes certain parameters from the differential characteristic. The CT saturation indicators are provided on a per-phase basis. Figure 3 shows the logic diagram and the directional principle, where it is also a fundamental aspect of the transformer percent differential element and does not have any associated settings. The directional element dynamically determines what seems to be the faulty circuit and compares its current angle with that of the sum of the remaining currents within the protected zone. The 87T algorithm identifies a transformer internal fault if the angle is less than 90°.

©2026 Doble Engineering, A Doble-Megger Company — 93rd International Conference of Doble Clients
All Rights Reserved

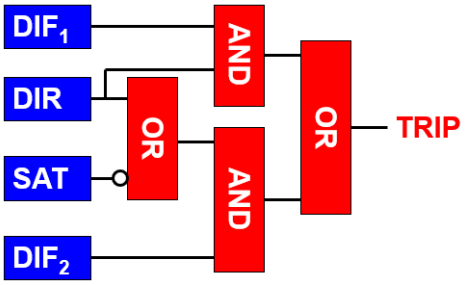

Saturation Condition and Directional Logic
Figure 3

MERGING UNITS IN DIGITAL SUBSTATIONS

With the next-generation of low-energy sensors, digitizing the voltage and the current data at the source is essential. MUs, locally connected to the instrument transformers' secondary terminals, sample the currents and voltages. Once these measurements are digitized, they are transmitted as Sampled Value (SV). The SVs are Ethernet packets.

The integration of MUs, process buses, and SVs processing on IEDs presents several challenges. It requires that protection engineers also focus on elements essential to the reliability and security of protection systems. These elements include: a delay added to protection response time, the precision of SV messages, and the system's reaction to the loss of a time source. To fill the highest protection and control standards, protection engineers must prove that protective relays utilizing SV remote data acquisition are fast, accurate, and reliable.

Fiber-optic cables transmit megabits of digitized analog data to IEDs through IEC 61850 process bus networks. This data incorporates SVs, Precision Time Protocol (PTP) messages, and Generic Object-Oriented Substation Events (GOOSE) messages exchanged between substation yards and control houses. IEDs use SV data measurements for their protection algorithms. Subsequently, they utilize GOOSE messaging to manage breaker status. Ethernet switches are frequently used to connect the IEDs within a process bus. MUs, along with the process bus network, form the remote data acquisition system for an SV-subscribed IED.

Each MU analog current and voltage input path represents an instrument transformer, which is essential for stepping down the external analog signal to levels that are appropriate for electronic circuitry. These signals are typically known as secondary values. Each secondary analog signal goes through an anti-aliasing filter, followed by periodic sampling and conversion into digital format via an analog-to-digital converter. Digital filters refine the digital sample stream, eliminating delays and nonlinearities in both magnitude and phase, which appear from the stepping down process, sampling, and processing stages. Ultimately, the MU can resample the adjusted data as needed at the correct SV sample rate, utilizing a precise time-of-day reference clock.

As per the UCA 61850-9-2LE guideline [2], an MU can publish either 4000 (50 Hz) or 4800 (60 Hz) samples per second, with the SV stream containing a Sample Counter (SmpCnt) set to 0000. The zeroes indicate the start of a new second. The MU assigns an incremental SmpCnt to each subsequent sample, reaching either 3999 or 4799, before resetting the counter back to 0000 at the beginning of the next second. Therefore, each SmpCnt corresponds to a specific moment within that second. It is essential that the analog data in each sample accurately reflects the analog measurements at the time indicated by the SmpCnt.

The MU accurately represents the instrument transformer analog as digital signals, which are essential for the reliability, safety, sensitivity, and selectivity of a protection and control application. The digital signals from multiple MUs can be used by any IED and aligned through the common time source reference.

Figure 4 shows a scenario in which two MUs are connected to a current instrument transformer. The MUs' digital output are connected to a process bus switch, where an IED is also connected.

©2026 Doble Engineering, A Doble-Megger Company — 93rd International Conference of Doble Clients
All Rights Reserved

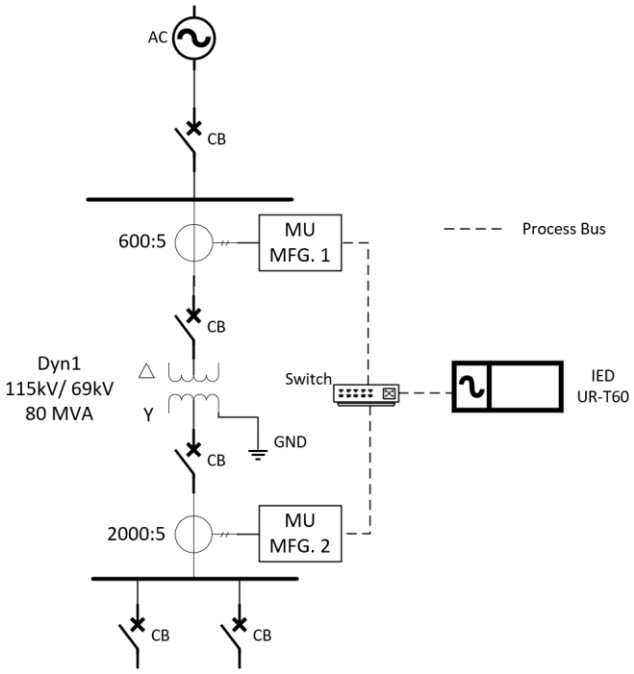

Digital Transformer Differential Scheme
Figure 4

TIME SYNCHRONIZATION

The scope of utility synchronization requirements now includes time synchronization. As power utilities advance the modernization of their grids, substations are being upgraded with digital monitoring, control, and automation systems. Additionally, the power grid is undergoing transformation from predominantly stable, centralized generation to a dynamic network characterized by variable Distributed Energy Resources (DER). Establishing a unified time reference throughout the grid is essential for synchronizing temporal operations, particularly in time sensitive applications.

Multiple PTP profiles are available for power system applications. In 2011, IEEE C37.238 introduced a power profile specifically for these applications. This profile, known as IEEE C37.238-2011, incorporated a profile-specific type, length, and value (TLV) to convey information such as the grandmaster ID, grandmaster time inaccuracy, and network time inaccuracy. Eventually, IEEE C37.238-2011 was divided into two standards: IEC/IEEE 61850-9-3, which outlines a base profile, and IEEE C37.238-2017, which enhances the capabilities of the IEC 61850-9-3 profile. Notably, IEC/IEEE 61850-9-3 does not include the IEEE C37.238 profile-specific TLVs and instead relies on the grandmaster clock quality field to assess time inaccuracy.

Utilities use a Local Area Network (LAN) for transmitting PTP messages, which allows a grand master clock equipped with a Global Navigation Satellite System (GNSS) receiver and provides timing to IEDs that operate as slave clocks.

Power system applications such as SVs, synchrophasors, and traveling-wave fault location require time synchronization. This time synchronization must be accurate to 1 microsecond or better. GNSS offers high-precision time synchronization, wherever there is satellite access. PTP timing solutions can support connected networks for protection, control, automation, and data communication by using an Ethernet communication framework. This ensures the application timing and synchronization even when GNSS signals are not available. PTP is an Ethernet-based protocol that allows timing information to be transmitted along control and data traffic on the same network. This eliminates the need for dedicated cables and extending beyond the distance limitations of IRIG-B.

PTP distributes precise timing across large distances, which resolves issues related to location or antenna blockage. It supports redundancy through multiple grandmaster clocks. It automatically switches if the primary clock becomes unavailable. PTP selects a primary clock from the available potential grandmaster clocks on a network. The primary clock is the time source for the PTP network. Other grandmaster clocks can automatically assume the role of grandmaster if the current grandmaster becomes unavailable.

©2026 Doble Engineering, A Doble-Megger Company — 93rd International Conference of Doble Clients
All Rights Reserved

PTP has an accuracy of less than a microsecond, measured in nanoseconds, which allows for extremely precise time stamps in relation to UTC.

The Sampled Values measurement solution with MUs integrates seamlessly into the substation network, as illustrated in Figure 5. In this configuration, MUs are connected to a common network backbone, allowing the process bus traffic—including measurement, management, and timing data—to operate over a unified infrastructure. Synchronization of both MUs and IED is accomplished via PTP timing information distributed through the network. The core network topology is typically determined by broader host network specifications, upon which the SV solution is implemented.

PTP effectively delivers timing to relevant devices across the network without the need for specialized cabling or configuration.

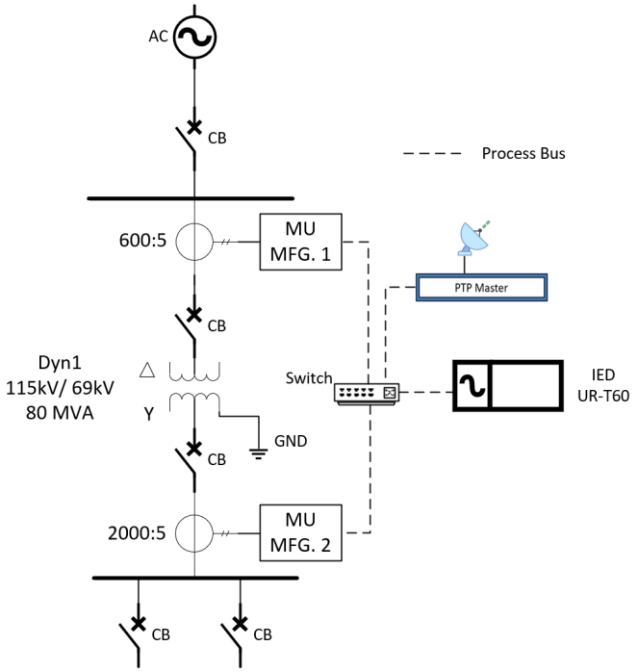

Digital and Synchronized Transformer Differential Scheme
Figure 5

Time loss in SV applications is a significant issue for several protection engineers. If not addressed, this time loss can lead to an artificial phase shift, causing false tripping. It is crucial for MUs to be synchronized with a time source that remains synced to the phase error limit of the measuring accuracy class.

INTEROPERABILITY

The ability of IEDs to work together, regardless of the manufacturer, is one of the most relevant features of the IEC 61850 standard. IEDs from multiple manufacturers can operate on a network or communication path, exchanging data and commands within the LAN substation.

Power utilities continue to face major challenges. IED vendors use their own proprietary tools to configure IEDs. The IEC 61850 standard establishes an integrated framework for communication; however, various versions or editions of the standard affect the interoperability of the IEDs. In Figure 6, some challenges are mentioned. They are not limited but considered the most important ones.

©2026 Doble Engineering, A Doble-Megger Company — 93rd International Conference of Doble Clients
All Rights Reserved

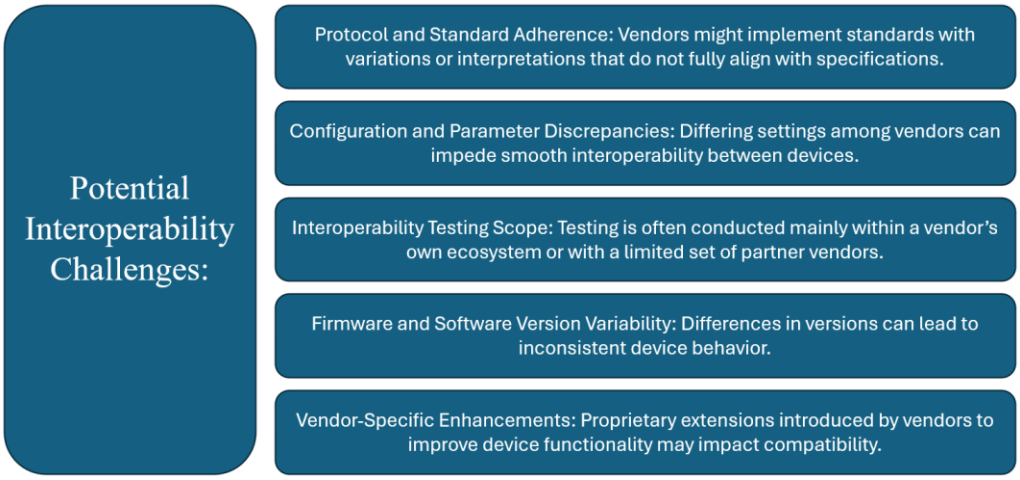

Interoperability Challenges
Figure 6

Interoperability is a key requirement for adequate integration and performance of multivendor systems.

TEST APPLICATION SET UP

The devices under test are illustrated in Figure 7, where a Doble Test Set injects three-phase currents into each MU. MUs from different manufacturers are designated as Manufactured 1 (MFG. 1) for Winding 1 of the Transformer and Manufactured 2 (MFG. 2) for Winding 2 of the Transformer. These MUs are connected to a PTP-aware switch configured as a Transparent Clock (TC), which also connects to the Master Clock based on a PTP Power Profile (C37.238-2011) with Domain = 0 and the IED UR-T60.

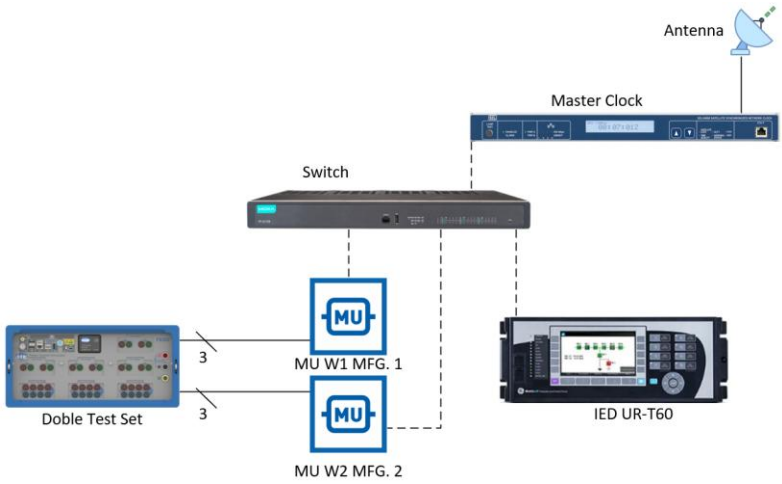

Devices Under Test
Figure 7

The initial set up challenges involved the Small Form-factor Pluggable (SFP) transducers. Each Ethernet switch and IED manufacturer supplies their own SFPs that are signed, which means that the SFPs are not always compatible. Sometimes, IED manufacturers do not have the latest IEC 61850 standard implementation in the IED's firmware, resulting in missing features as mentioned in the Interoperability section. Expecting a new firmware version may postpone the implementation process. Running a relay lab test prior to field deployment is the most effective strategy to avoid potential interoperability problems.

Validation of the SVs published by the MUs within the network is crucial. This can be checked with any network analysis tool. Figure 8 displays the details for 2 SVs.

©2026 Doble Engineering, A Doble-Megger Company — 93rd International Conference of Doble Clients
All Rights Reserved

SVID	Applicatio...	Configuration...	Routable	Multicast	MAC Address		SmpSynch	Number of ASDU	Simulated
					Source	Destination			
WINDING2_MU0201	0FA0	1	false	true	00-25-65-00-3C-2E	01-0C-CD-04-00-02	Global	1	false
WINDING1_MU0101	4000	1	false	true	F8-02-78-10-4C-E5	01-0C-CD-04-00-01	Global	1	false

SVs' Information Captured from the Network
Figure 8

In Figure 9, an IED has a stream status, which indicates in green color the reception of an SV stream when it is online. If the SV is offline, the IED will show the status in red color. The stream status does not reflect if the SV is synchronized.

RxSV Streams	RxSV1	RxSV2
SV Stream	Enabled	Enabled
svID	WINDING1_MU0101	WINDING2_MU0201
Dst MAC	01-0C-CD-04-00-01	01-0C-CD-04-00-02
ConfRev	1	1
Force MU Out Of Service	OFF	OFF
Stream Status		

IED SV Stream Status
Figure 9

Each SV can be synchronized along with the IED, having the synchronization will help secure an appropriate behavior for the protection and the system. Figure 10 illustrates the proper synchronization of each SV and the IED. At the top, the network analyzer synchronized, in the middle, the general view of the SVs is accurately synchronized. On the bottom left, there is confirmation that SV_MU1 is synchronized. In the bottom center, the IED is synchronized, and on the bottom right, there is confirmation that SV-MU2 is synchronized.

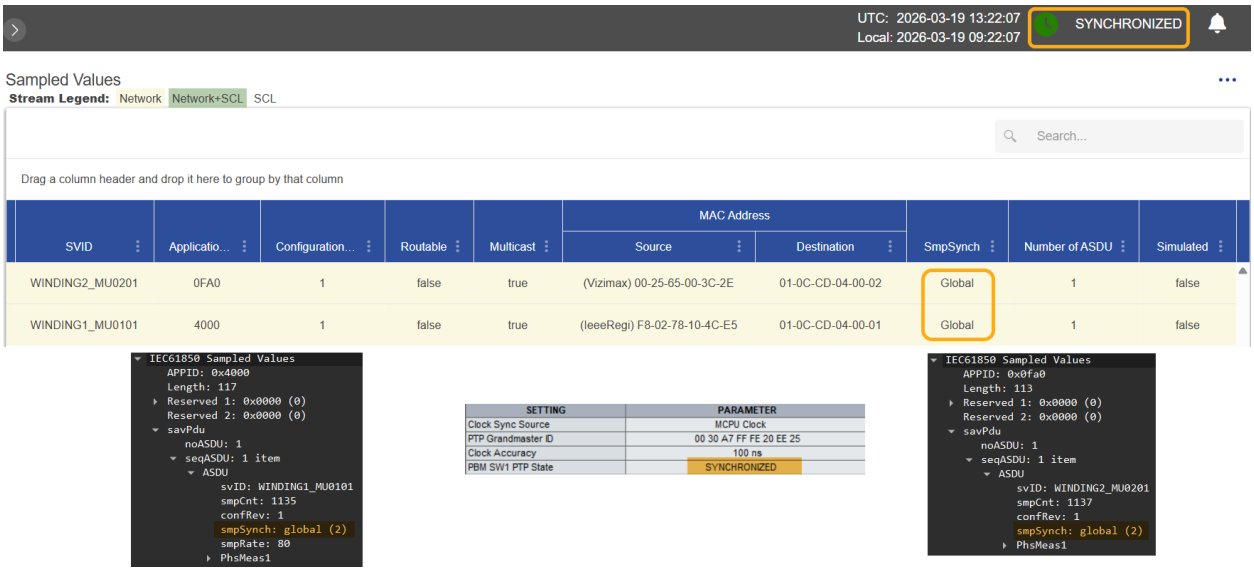

Proper Synchronization of IED and MUs
Figure 10

The SV contains a Sample Synchronism (smpSynch) flag, that defines the synchronization mechanism used by the clock for sending SV messages. The value can be:

- 0 – None - The sample values are not synchronized to any external source. The local clock runs independently.

©2026 Doble Engineering, A Doble-Megger Company — 93rd International Conference of Doble Clients
All Rights Reserved

- 1 – Local - The sender is synchronized to a local source (e.g., a local GPS input or IRIG-B). It provides high precision relative to other local equipment but might not be traceable to UTC.
- 2 – Global - The sender is synchronized to a high-accuracy, traceable master clock, usually via PTP (IEEE 1588) or GNSS (GPS/UTC).

Normal Conditions

The balance load flow condition will be simulated using a Doble Test Set. This will check the performance of the MUs and SVs in conjunction with the 87T. The IED's phasor diagram tool can assist in visualizing the received measured sampled value streams. Figure 11 illustrates the accurate values. The test set generates secondary values, which are injected into the MU. The MU needs CT and VT ratio settings to convert the secondary injected signals into primary values. The digital signals generated by the MUs are the ones that the IED processes. According to the IEC 61850-9-2 standard, the sampled value represents primary values.

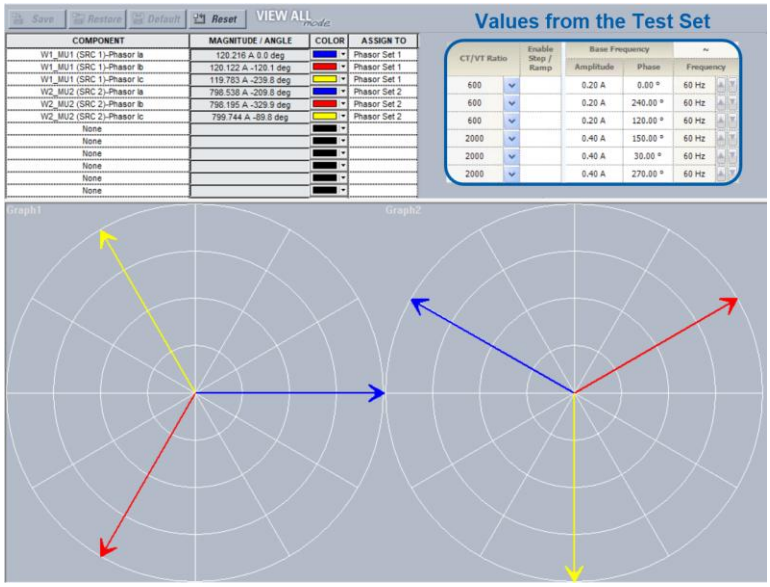

IED Measurement of the Sampled Values streams
Figure 11

Loss of Synchronization

PTP loss of synchronization happens when slave clocks fail to accurately follow the grandmaster clock. Often, this is the result of network congestion or non-PTP-aware Ethernet switches that queue timing packets. Network asymmetry, which is the time taken by the master clock's packets to arrive to the slave clock, differ from the return path—often due to routed networks, different fiber paths, or varying queuing delays—directly contributing to inaccurate offset calculations. Other factors include the GNSS/GPS signal failure that provides the grandmaster, which can lead to holdover mode or complete timing loss, as well as malicious activities like packet delay manipulation. This packet delay manipulation can be the result of intentionally modified timing messages by an "intermediary." Additionally, improper network configuration, such as misconfigured PTP domains, mismatched profiles, or the use of incompatible hardware, can result in a loss of synchronization.

During testing, a simulated loss of synchronization condition was performed by removing the PTP packages from the network. When the master clock does not provide PTP messages, the switch, the MUs and the IED continue to be time synchronized. The IEC 61869-9 standard outlines the idea of "Holdover Mode," which specifies that if the synchronization signal is lost for a brief period of time, the MU must continue transmitting the SV message without any interruptions as shown in Figure 13. The minimum Holdover Mode duration is set at 5 seconds. This acts as a workaround for temporary issues with the sync signal; and considering that the MU is equipped with an internal precision clock that maintains an insignificant drift until the sync signal is restored. The smpSynch flag should remain unchanged.

The Ethernet switch, which is a TC, shows that the clock identity is the master clock as shown in the left side of Figure 12. When the PTP messages are no longer in the network, the switch identifies its own clock, as shown on the right side of Figure 12.

©2026 Doble Engineering, A Doble-Megger Company — 93rd International Conference of Doble Clients
All Rights Reserved

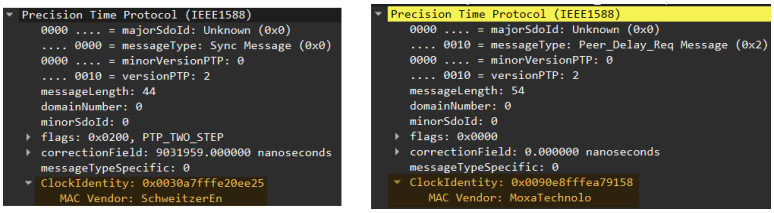

PTP Loss Showing a Different Clock Identity
Figure 12

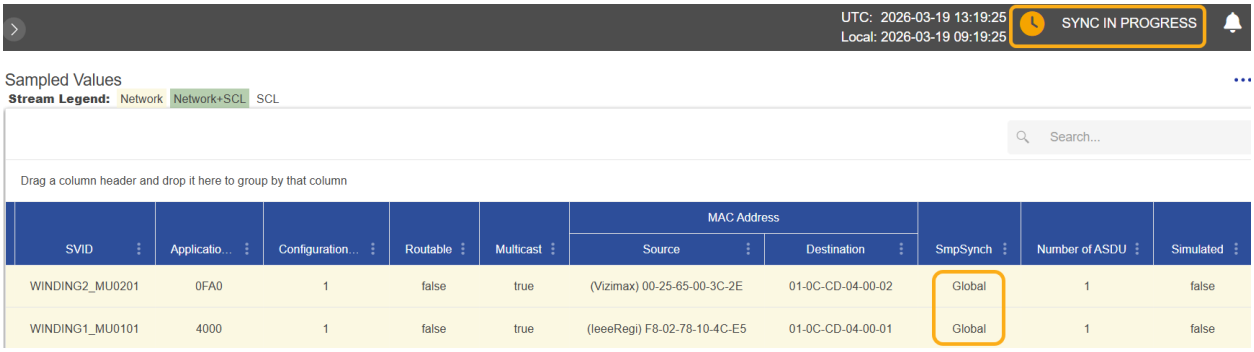

A Network Analyzer Tool Detects Loss of Synchronization as the SVs Still Sending the Message as Global
Figure 13

Once the PTP messages are no longer in the network, one starts examining the phasor diagram tool of the IED. The measurement remains unchanged as shown in Figure 14; however, the MUs have already identified the loss of synchronization, and some of the MUs may indicate this as an alarm.

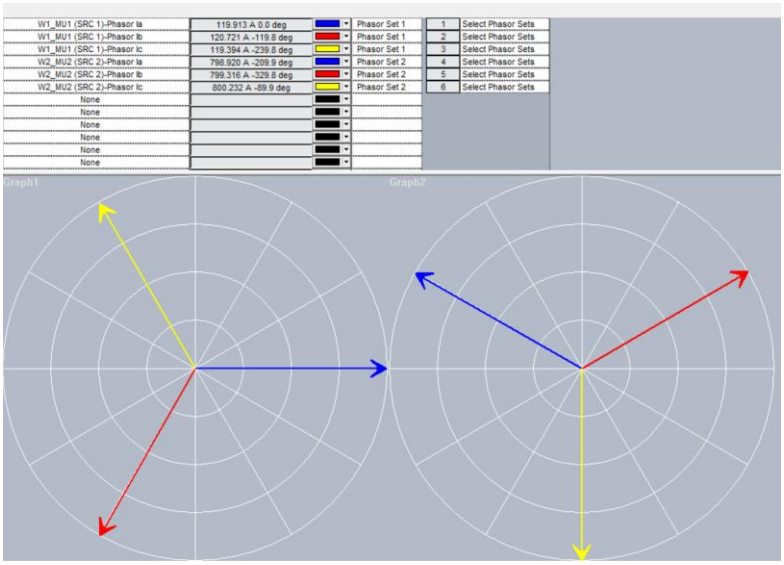

No Change in Measurement Even the Loss of Synchronization
Figure 14

If an internal fault occurs during Holdover Mode, the 87T will trip as expected and will transmit the configured Generic Object-Oriented Substation Event (GOOSE) messages. Figure 15 shows the sequence of events related to the simulation, when an internal fault occurs following a loss of synchronization. In the sequence of events, row 2 indicates the PTP messages' failure within the network. Row 3 shows the detection of the fault in the unit. The delta time between row 2 and row 3 is 2.40 seconds.

©2026 Doble Engineering, A Doble-Megger Company — 93rd International Conference of Doble Clients
All Rights Reserved

The 87T identifies the fault and generates a trip; the time interval marked by the operand as the pickup element being activated, and the command to trip with the operation element is 0.0209 seconds. Following the PTP failure, the IED announces that there is a Process Bus synchronization failure; and the SV Stream encounters an issue. All this happens in 40.55 seconds.

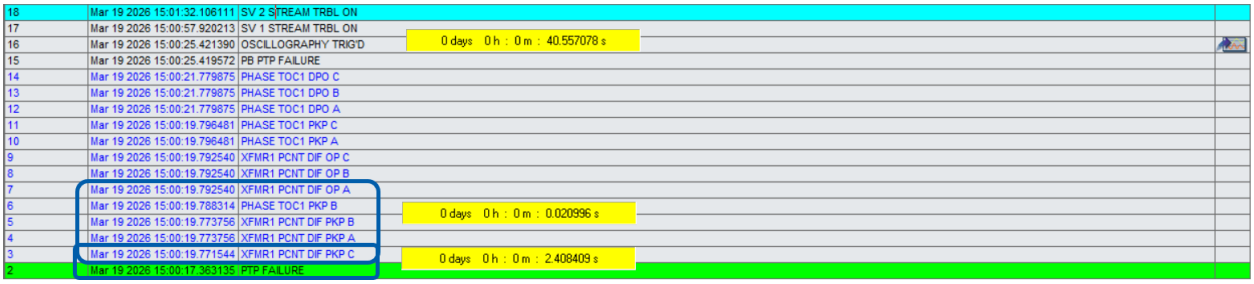

Sequence of Events
Figure 15

When the MU permanently loses synchronization, the standard refers to this as "Free-running Mode," indicating that the SVs should still be sent at a sampling rate with a deviation not exceeding ± 100 x 10^{-6}. Even in the absence of external timing, the sample counter must continue to increase and reset upon reaching its limit, as if it were still synchronizing. In this scenario, the smpSynch flag must be set to zero, signifying an absence of synchronization.

The 87T algorithm and/or the IED becomes blocked, when the operand referred to as "Sampled Value x Stream Trouble On" is set to 1 in the logic. This indicates that one of the streams has entirely lost synchronization, resulting in the smpSynch flag being 0 (none). Therefore, the measurement is no longer accessible in the IED, and alarms can be shown in the IEDs.

Figure 16 shows a network analyzer tool with a loss of synchronization. One SV is not synchronized but the other SV is still shown as global. This means that one manufacturer has an extended holdover mode time. The IED's sequence of events shows the PTP flags as failure and the operand mentioned in the paragraph above.

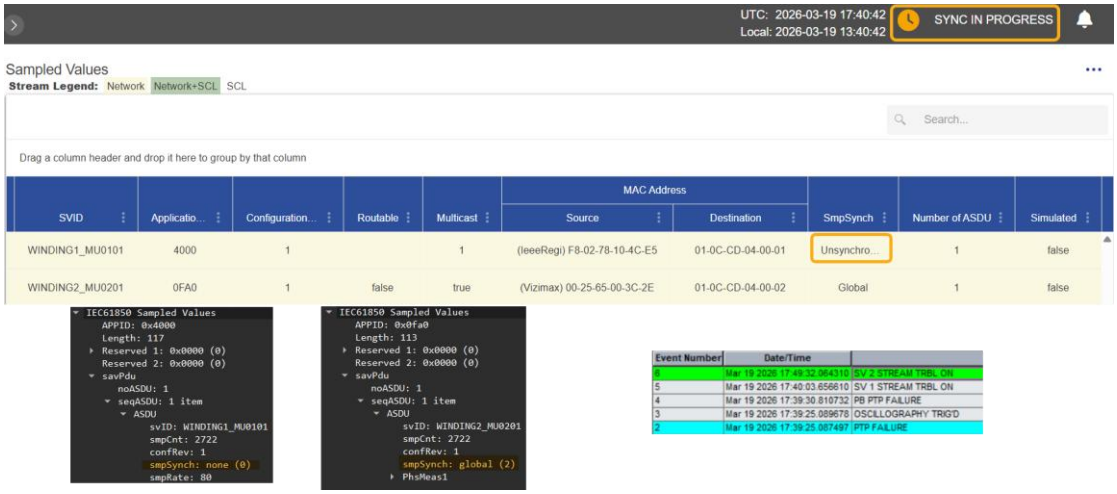

Loss of Synchronization in One SV and IED Blocked
Figure 16

CONCLUSIONS

The interoperability evaluation between multivendor IEC 61850 devices requires a comprehensive methodology that includes: testing and verification procedures. To mitigate these interoperability issues, it is crucial to engage in thorough testing, collaboration, and communication with vendors.

©2026 Doble Engineering, A Doble-Megger Company — 93rd International Conference of Doble Clients
All Rights Reserved

This paper shows that multi-vendor MUs can be successfully applied to a transformer differential protection element, but only if the communication network, protection logic, and time-synchronization design are treated as a single, tightly integrated system and not as independent layers.

From a network perspective, the test confirms that IEC 61850 process-bus architecture provides a viable framework for the SV messages from different vendors as long as the Ethernet infrastructure is engineered with deterministic latency, sufficient bandwidth, and redundancy (HSR/PRP).

Consequently, network engineering becomes part of the protection design, with switch configuration, and redundancy planning clearly determined by the protection element's sensitivity to delay, jitter, and loss.

With respect to protection methodologies, it demonstrates that an IEC 61850-based current differential scheme remains secure and dependable; under multi-vendor conditions provided by all correctly time-aligned sampled-value streams. When a particular MU synchronization is degraded or lost, a selective blocking of the affected protection elements occurs. Quality flags such as smpSynch are essential to avoid indiscriminate trips, while preserving protection for the remaining healthy streams.

Interoperability emerges as both the main benefit and the principal challenge of a multi-vendor scheme. This research shows that the IEC 61850 files, standardized logical nodes, GOOSE and SV, can be used to achieve functional interoperability between IEDs and MUs manufacturers, when engineering tools correctly interpret and exchange configuration.

The consequences of losing time synchronization are not just about the lack of a global reference but focus on how well the MUs align with each other to perform the same protection function. Implementing strong PTP or equivalent timing architectures, ensuring redundancy in time sources including the possibility of relays serving as local PTP grandmaster is essential. Furthermore, protection logic should be established to oversee synchronization quality; raise alarms for any discrepancies; and carefully downgrade or reconfigure protection functions when the time quality declines.

In this framework, it is evident that multi-vendor MUs can be both technically feasible and advantageous, facilitating flexible, vendor-agnostic transformer protection solutions. It shows that interoperability is validated in laboratory conditions and that time synchronization vulnerabilities are explicitly tackled in both network and protection designs.

ACKNOWLEDGEMENTS

The author thanks Jose Ruiz for his comments and revision of this paper.

KEYWORDS

Sampled Value (SV), Merging Unit (MU), Precision Time Protocol (PTP), Intelligent Electronic Device (IED), Distributed Energy Resources (DER), Global Navigation Satellite System (GNSS), Current Transformer (CT), Inter-Range Instrumentation Group Time Code Format B (IRIG-B), Sample Counter (SmpCnt), International Electrotechnical Commission (IEC), Local Area Network (LAN), Global Navigation Satellite System (GNSS), Small Form-factor Pluggable (SFP), Sample Synchronism (smpSynch), Transparent Clock (TC), Generic Object-Oriented Substation Event (GOOSE).

REFERENCES

[1] GE Vernova (2025) UR Family - T60 Instruction Manual Transformer Protection System T60-1601-0090-87x-1 p. 574.

[2] UCA International Users Group, "Implementation Guideline for Digital Interface to Instrument Transformers Using IEC 61850-9-2," July 2004.

[3] Marc Desjardine, Paul Forsyth, Ralph Mackiewicz, *"Real Time Simulation Testing Using 61850", IPST Conference Lyon, 2007.*

[4] Francois Guay, Jacques Cardinal, Éric Lemieux, Sylvain Guérette, *"Digital Real-Time Simulator using IEC 61850 communication for testing devices",* CIGRÉ Canada Conference, 2012.

[5] IEEE 1588-2008, "IEEE Standard for a Precision Clock Synchronization Protocol for Networked Measurement and Control Systems", IEEE, 2008.

[6] IEC 61850-9-2 LE: Implementation Guideline for Digital Interface to Instrument Transformers Using IEC 61950-9-2; UCA International Users Group.

[7] Jose Ruiz, David Gueret, Bryan Gwyn, *"Testing in the Digital Protection Era",* International Conference of Doble Clients, 2024.

©2026 Doble Engineering, A Doble-Megger Company — 93rd International Conference of Doble Clients
All Rights Reserved

[8] Nichol Shangase, N., Ratshitanga, M., & Mnguni, M., *"Transformer Differential Protection System with IEC 61850 GOOSE Communication Protocol",* 32nd Southern African Universities Power Engineering Conference, 2024.

[9] Mark Adamiak, Drew Baigent – GE Digital Energy. Ralph Mackiewicz – SISCO, *"IEC 61850 Communication Networks and Systems in Substations: An Overview for Users",* GE Digital Energy and SISCO, 2009.

BIOGRAPHY

Marcos Velázquez Lechuga

Principal Client Service Protection Engineer

Marcos has been employed with Doble Engineering since 2013. Currently working in the Client Service Department, he is responsible for technical assistance to clients with F-series units under lease contracts in the USA and Canada. Also, his responsibilities include service as Secretary for the Protection Automation Control, and Communication (PACC) Committee, and Secretary for the LATAM Committee. His experience includes Conference Presentations, Factory Acceptance Testing, Field Services, Homologation Testing, Laboratory Testing, and End-to-End Testing. He has supported the development of Doble products for application testing of protection schemes based on IEC 61850 and has participated with the IEC 61850 User Group in the Interoperability testing in Charlotte, NC (2019), Milan, Italy (2022), and Birmingham, AL (2024). He has been an IEEE member since 2020. Before Doble, Marcos worked for 7 years as a representative of General Electric Multilin in México in the Applications & Support Engineering department, to support the utility CFE (Comisión Federal de Electricidad) and the industry. Marcos obtained his Bachelor's Degree in Software and Networks, and his Master's Degree in Project Management from Universidad Tecnológica de México.

©2026 Doble Engineering, A Doble-Megger Company — 93rd International Conference of Doble Clients
All Rights Reserved