2026 International Conference of Doble Clients

Multi-vendor Merging Units Applied to a Transformer Protection Element, and the Impact of Time Synchronization Loss

Marcos Velázquez Lechuga

Doble Engineering

March 29 – April 3, 2026

Boston, Massachusetts USA

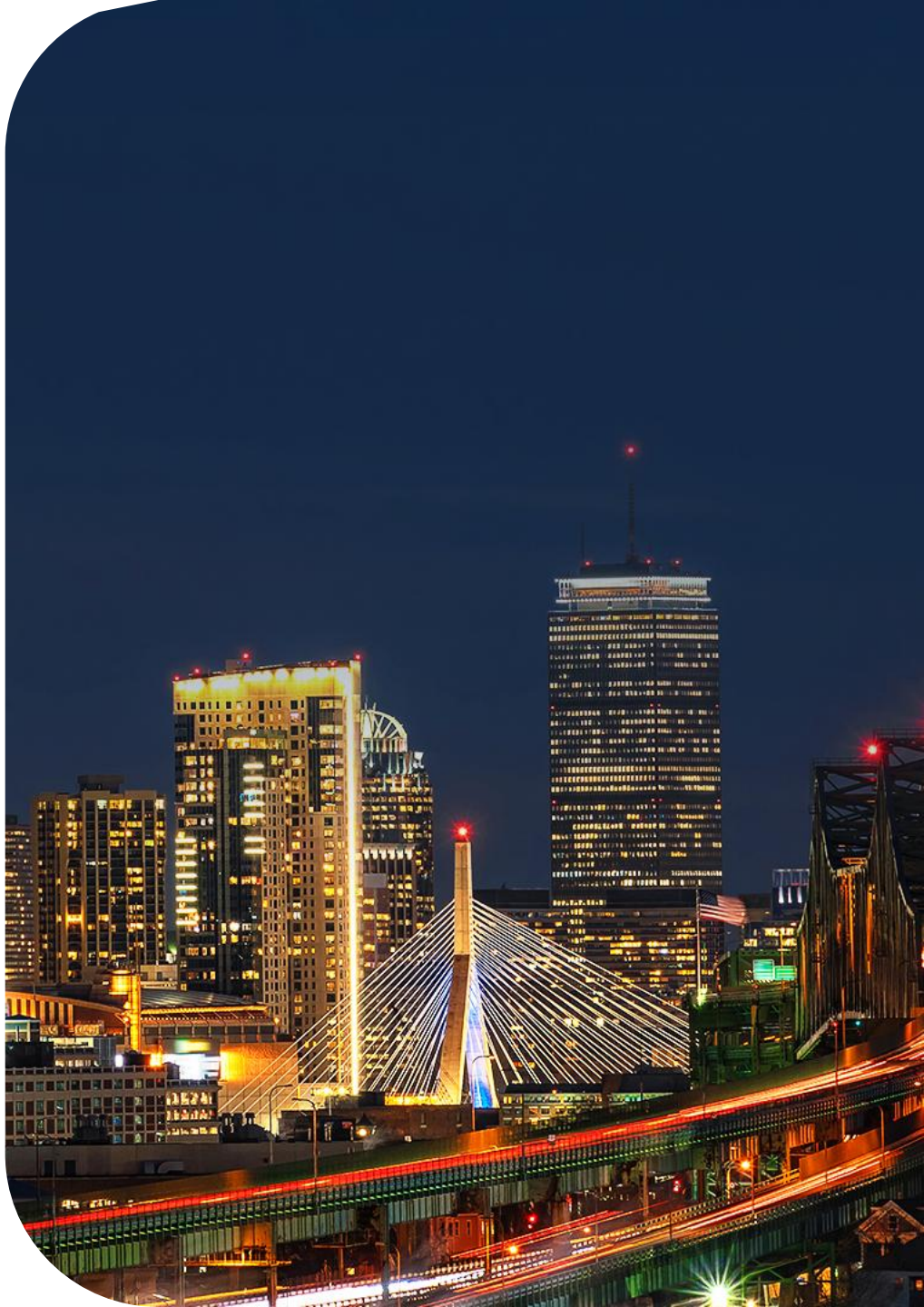

©2026 Doble Engineering, A Doble-Megger Company. All Rights Reserved.

Agenda

- Current Differential Protection
- Merging Unit (MU)
- Time Synchronization
- Interoperability
- Test Application
- Conclusions
- Q & A

©2026 Doble Engineering, A Doble-Megger Company. All Rights Reserved.

Current Differential Protection

- Based on Kirchhoff's Current Law (KCL)
- Compares currents
- No differential current = no fault
- The 87T detects internal faults

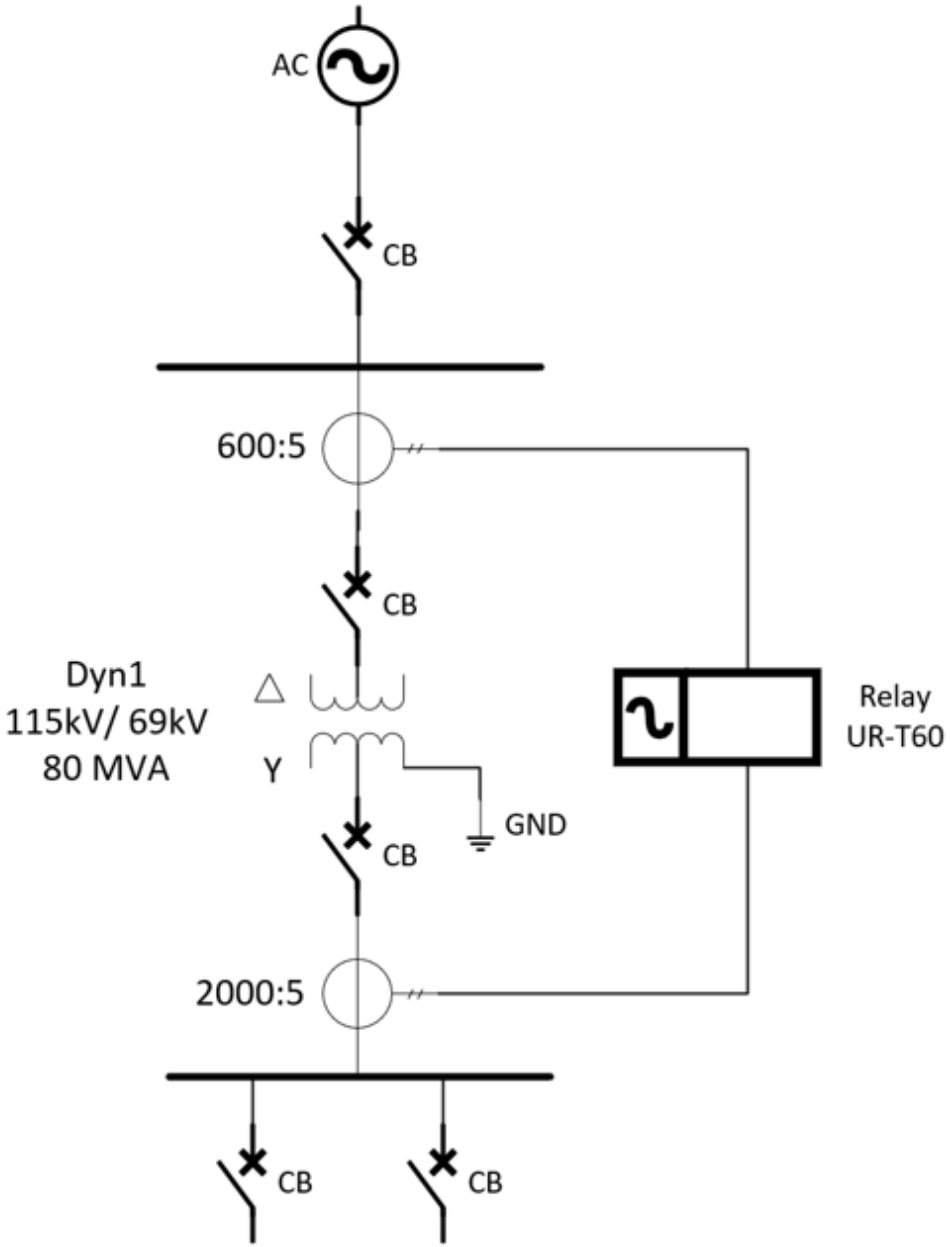

©2026 Doble Engineering, A Doble-Megger Company. All Rights Reserved.

Current Differential Protection

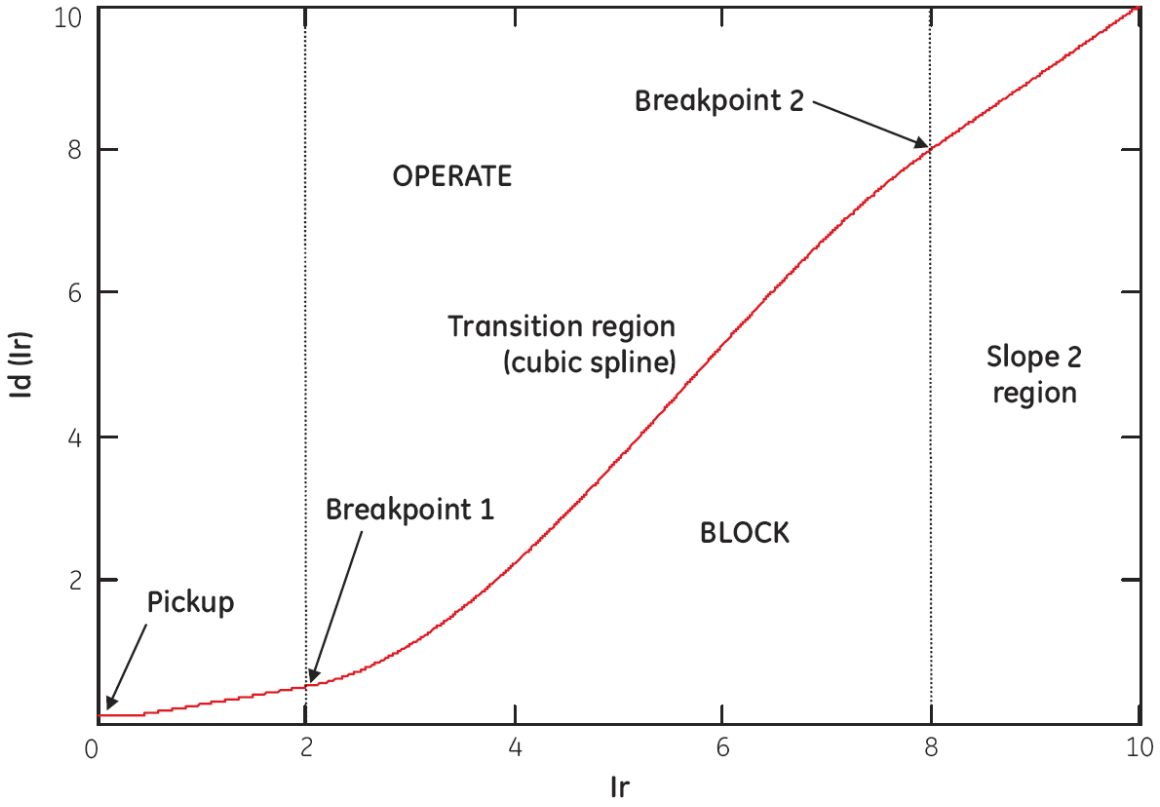

$$I_r = K \; x \max \left(\left| \overrightarrow{I_{1comp}} \right| , \left| \overrightarrow{I_{2comp}} \right| \right)$$

- Restraint current is determined by the maximum of
  - Slope 1 and 2
  - Transition area between breakpoint 1 and breakpoint 2

©2026 Doble Engineering, A Doble-Megger Company. All Rights Reserved.

Current Differential Protection

Increase of differential current:

- Inherent CT inaccuracies
- Onload tap changer operation
- CT Saturation

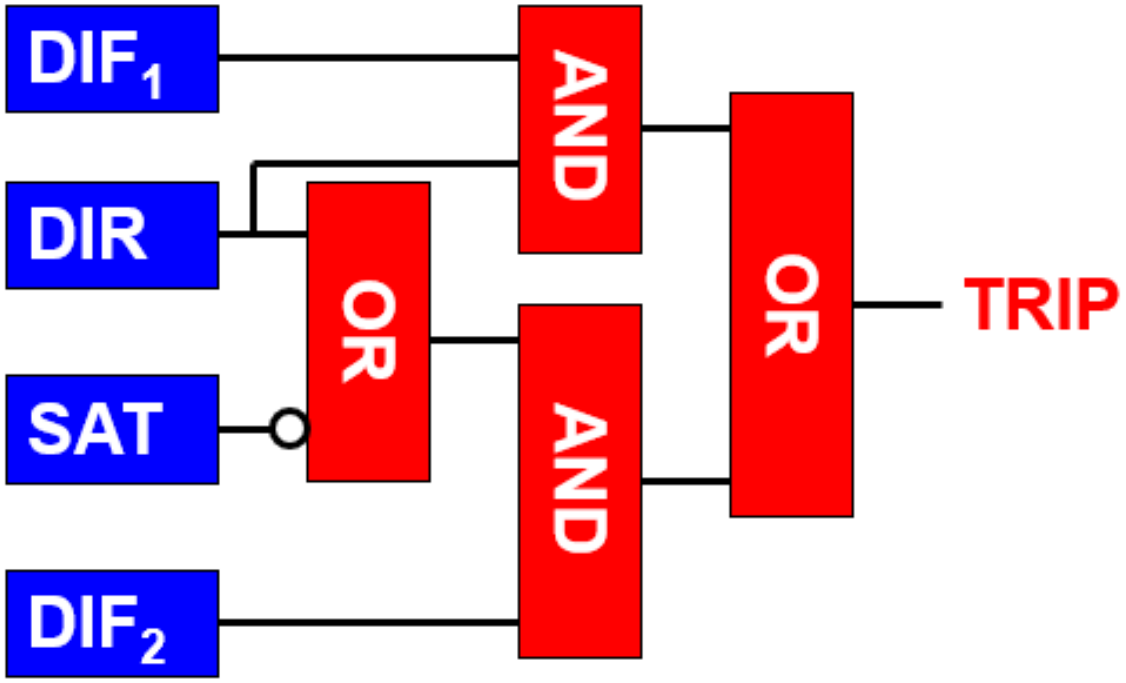

©2026 Doble Engineering, A Doble-Megger Company. All Rights Reserved.

Merging Unit (MU)

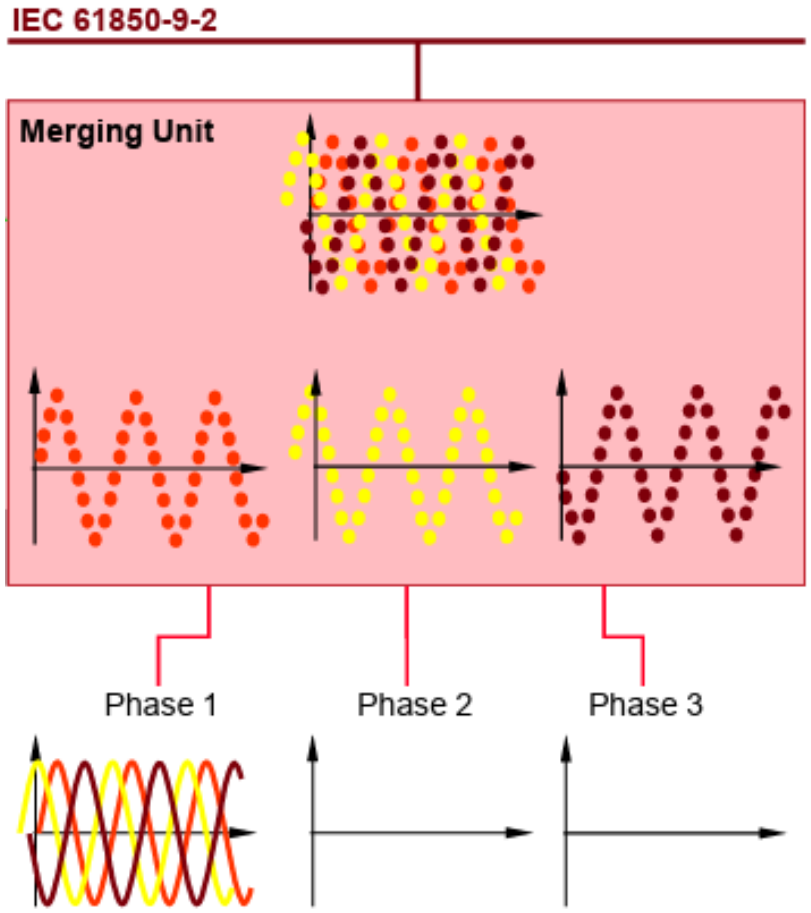

Vasudevan, B., Antonova G. S. (2021). *Process Bus Fundamentals: Merging Units* (p. 10). HITACHI ABB POWER GRIDS.

- Communication interface according to IEC 61850-9-2
- Merging and timely correlation current and voltage values from the three phases
- Sampling or re-sampling of current and voltage values

©2026 Doble Engineering, A Doble-Megger Company. All Rights Reserved.

Merging Units

In an IEC 61850-9-2 / IEC 61869-9 process bus, the MU publishes time-synchronized sampled values (SVs) as multicast Ethernet frames.

Protection and control Intelligent Electronic Devices (IEDs) subscribe to these SV streams instead of having direct analog connections, which simplifies wiring and improves flexibility.

Typical protection profiles use 80 samples per cycle at 50/60 Hz, providing high-resolution measurements for fast and accurate protection.

©2026 Doble Engineering, A Doble-Megger Company. All Rights Reserved.

Merging Units

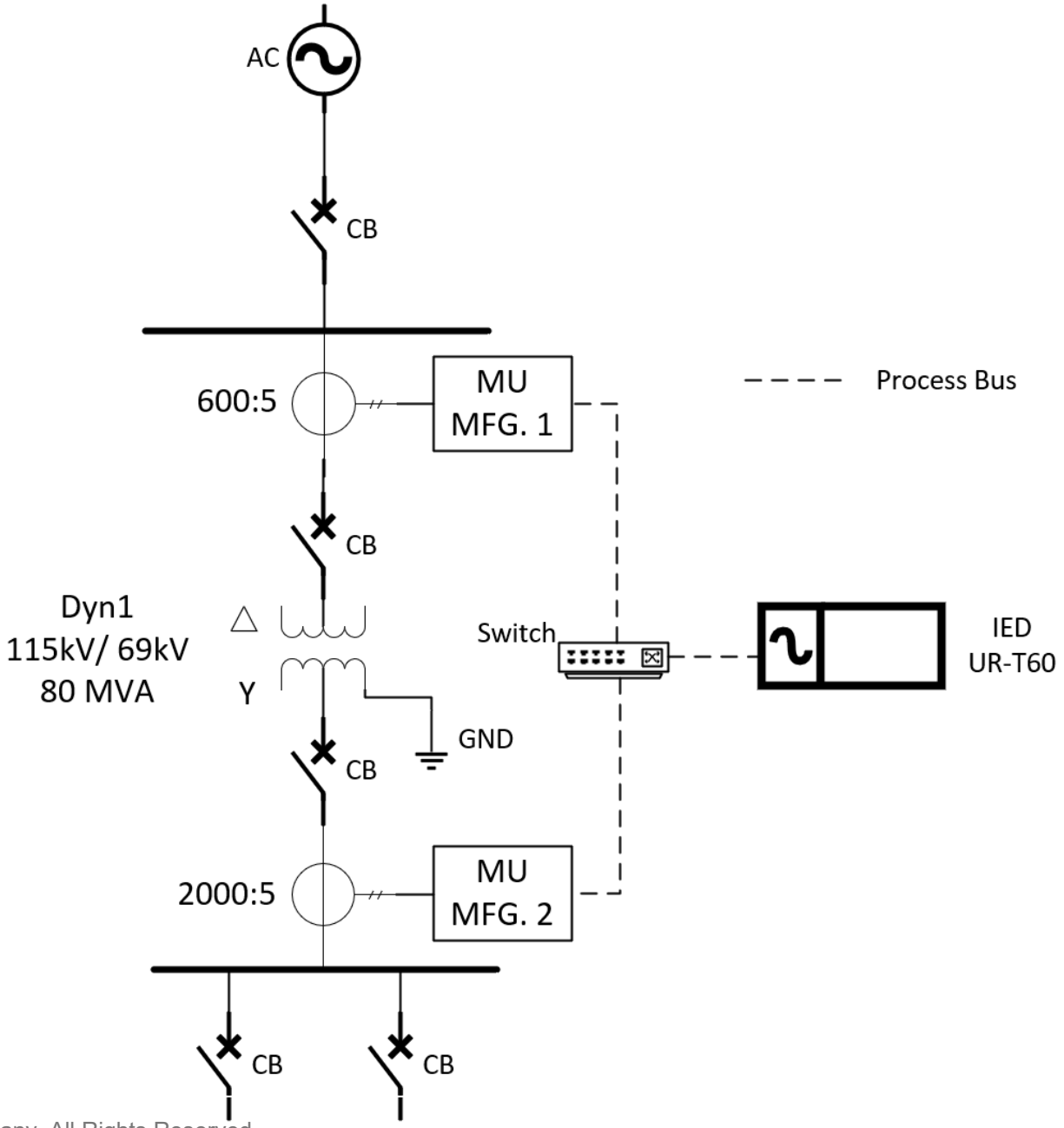

©2026 Doble Engineering, A Doble-Megger Company. All Rights Reserved.

Time Synchronization

- IEC 61850-9-2 LE, time synchronization = PPS
- IEC 61869-9, time synchronization = IEEE 1588

Why the synchronization:

- Improves Reliability
- Better Understanding of the Power System
- Test and Very Operation of Protection Schemes

Sequence of Events, Synchronization of Phasor Measurement Units (PMUs), Traveling Wave Fault Location (TWFL)

©2026 Doble Engineering, A Doble-Megger Company. All Rights Reserved.

Time Synchronization

- PTP originally defined in the IEEE 1588 in 2002
- IEEE 1588 v2 – 2008
- Different profiles:
  - Industrial
  - Military
  - Telecom
- Profiles that we will use:
  - Power Profile (IEEE C37.238:2011 and 2017)
  - Power Utility Profile (IEC 61850-9-3:2016)

©2026 Doble Engineering, A Doble-Megger Company. All Rights Reserved.

Time Synchronization

- IEDs use Ethernet-based networks and communications protocols
- IEC 61850 standards use shared Ethernet communication for multiple applications.
- IEDs from different brands can interact without custom or proprietary links.
- Packet base time synchronization protocol describes the mechanisms how to distribute time over a packet-based network (Ethernet)

©2026 Doble Engineering, A Doble-Megger Company. All Rights Reserved.

Time Synchronization

The calculation mechanism use:

SYNC
FOLLOW_UP
DELAY_REQ
DELAY_RESP

$$\text{Delay} = \frac{((T2-T1)+(T4-T3))}{2}$$

$$\text{Offset} = \frac{((T2-T1)-(T4-T3))}{2}$$

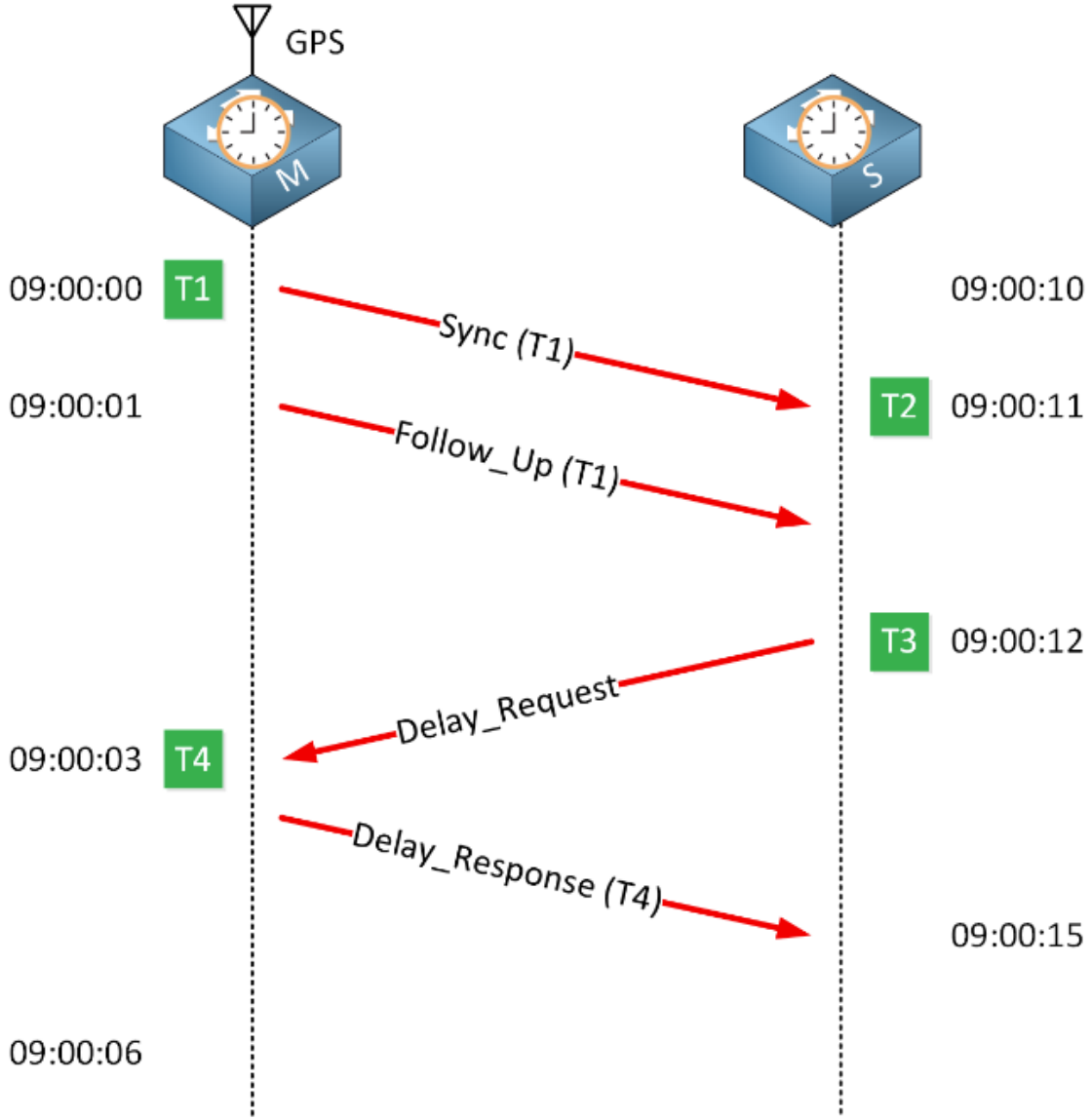

Molenaar, R. (2023, November 30). *Introduction to Precision Time Protocol (PTP)*. NetworkLessons.com. https://networklessons.com/cisco/ccnp-encor-350-401/introduction-to-precision-time-protocol-ptp

©2026 Doble Engineering, A Doble-Megger Company. All Rights Reserved.

Time Synchronization

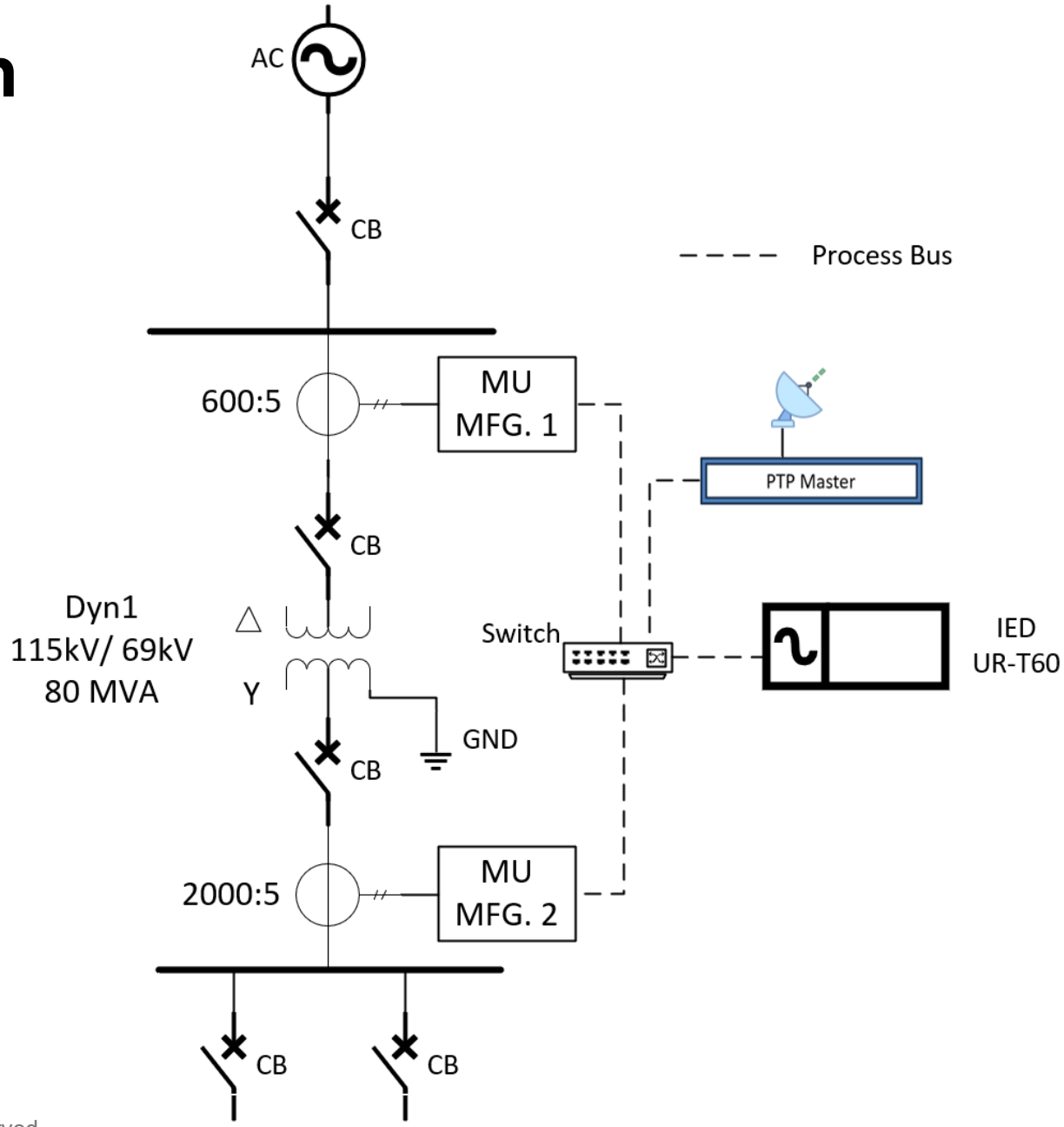

©2026 Doble Engineering, A Doble-Megger Company. All Rights Reserved.

Interoperability

Potential Interoperability Challenges:

- Protocol and Standard Adherence: Vendors might implement standards with variations or interpretations that do not fully align with specifications.
- Configuration and Parameter Discrepancies: Differing settings among vendors can impede smooth interoperability between devices.
- Interoperability Testing Scope: Testing is often conducted mainly within a vendor's own ecosystem or with a limited set of partner vendors.
- Firmware and Software Version Variability: Differences in versions can lead to inconsistent device behavior.
- Vendor-Specific Enhancements: Proprietary extensions introduced by vendors to improve device functionality may impact compatibility.

©2026 Doble Engineering, A Doble-Megger Company. All Rights Reserved.

Test Application

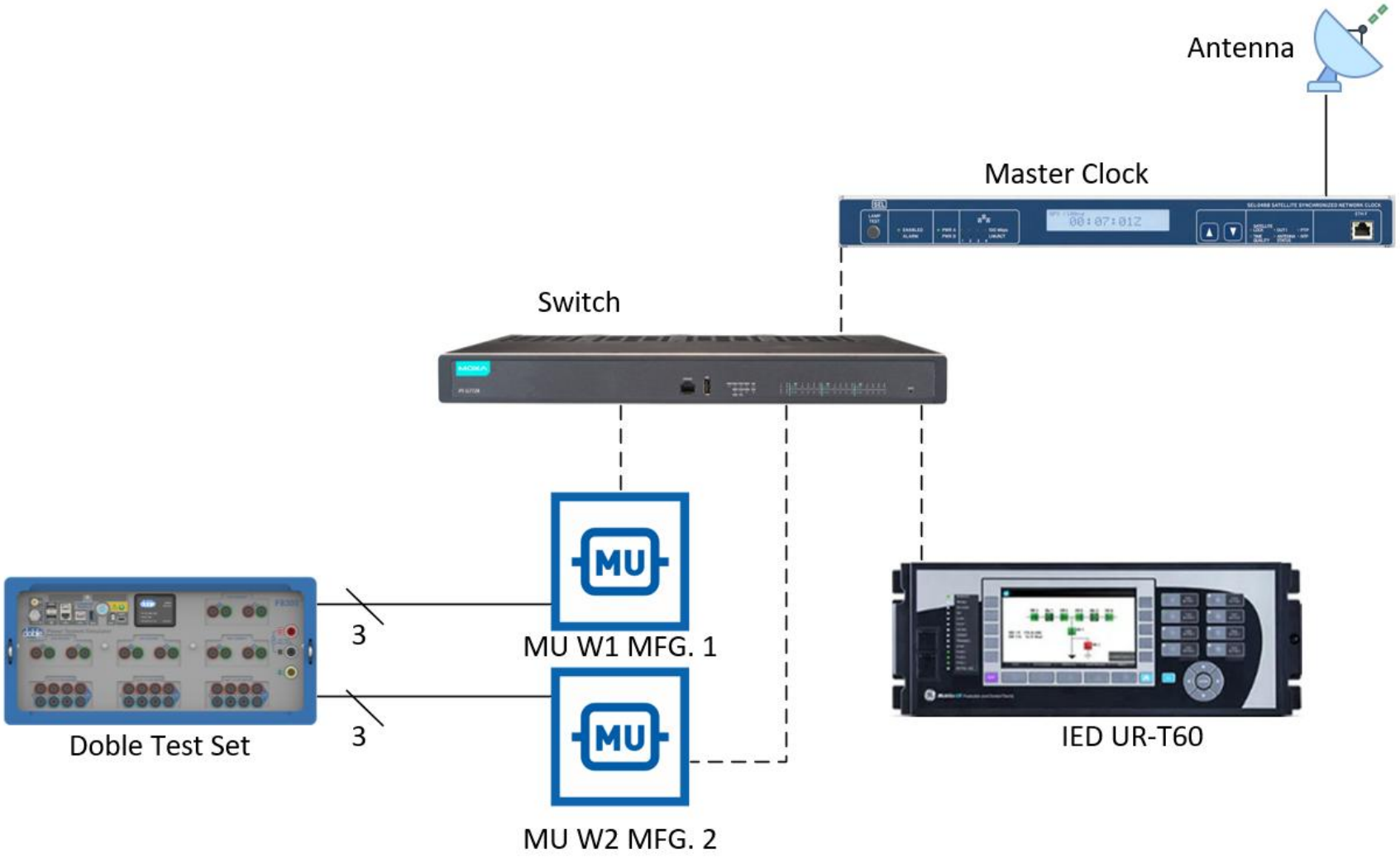

©2026 Doble Engineering, A Doble-Megger Company. All Rights Reserved.

Test Application

What do we have in the network?

SVID	Applicatio...	Configuration...	Routable	Multicast	MAC Address		SmpSynch	Number of ASDU	Simulated
					Source	Destination			
WINDING2_MU0201	0FA0	1	false	true	00-25-65-00-3C-2E	01-0C-CD-04-00-02	Global	1	false
WINDING1_MU0101	4000	1	false	true	F8-02-78-10-4C-E5	01-0C-CD-04-00-01	Global	1	false

RxSV Streams	RxSV1	RxSV2
SV Stream	Enabled	Enabled
svID	WINDING1_MU0101	WINDING2_MU0201
Dst MAC	01-0C-CD-04-00-01	01-0C-CD-04-00-02
ConfRev	1	1
Force MU Out Of Service	OFF	OFF
Stream Status		

©2026 Doble Engineering, A Doble-Megger Company. All Rights Reserved.

Test Application

Status of the synchronization in the devices

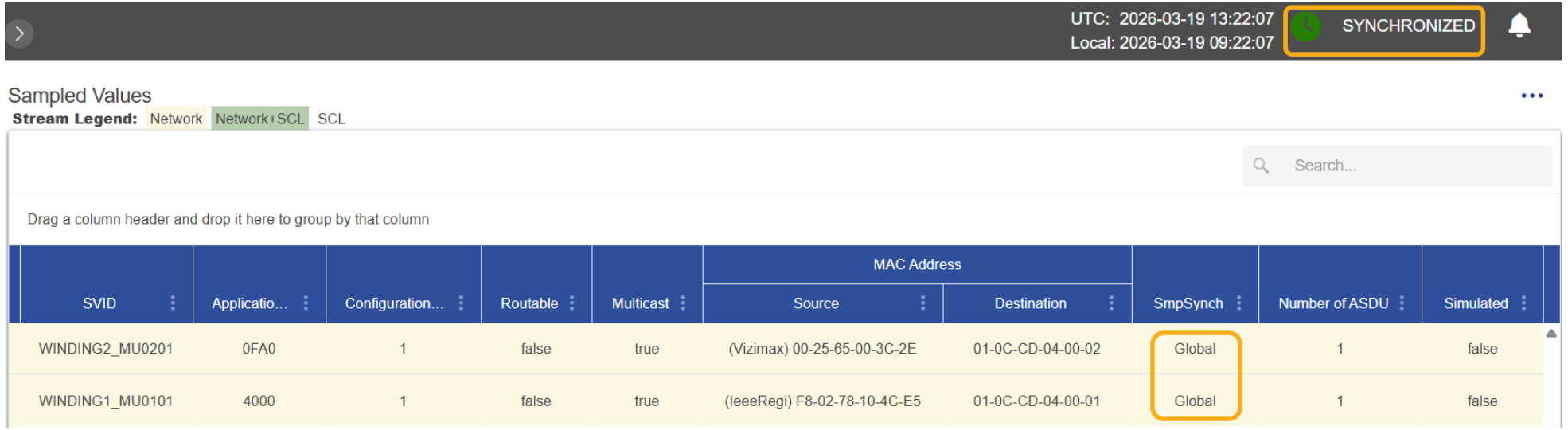

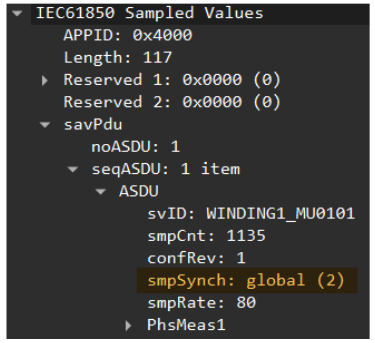

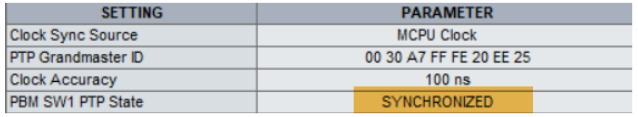

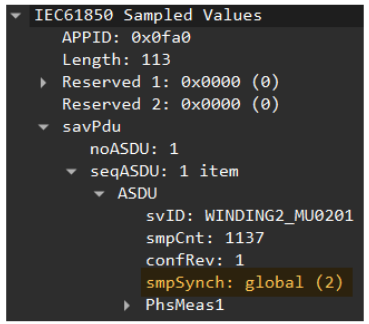

©2026 Doble Engineering, A Doble-Megger Company. All Rights Reserved.

Test Application

IED Measurement of the Sampled Values streams

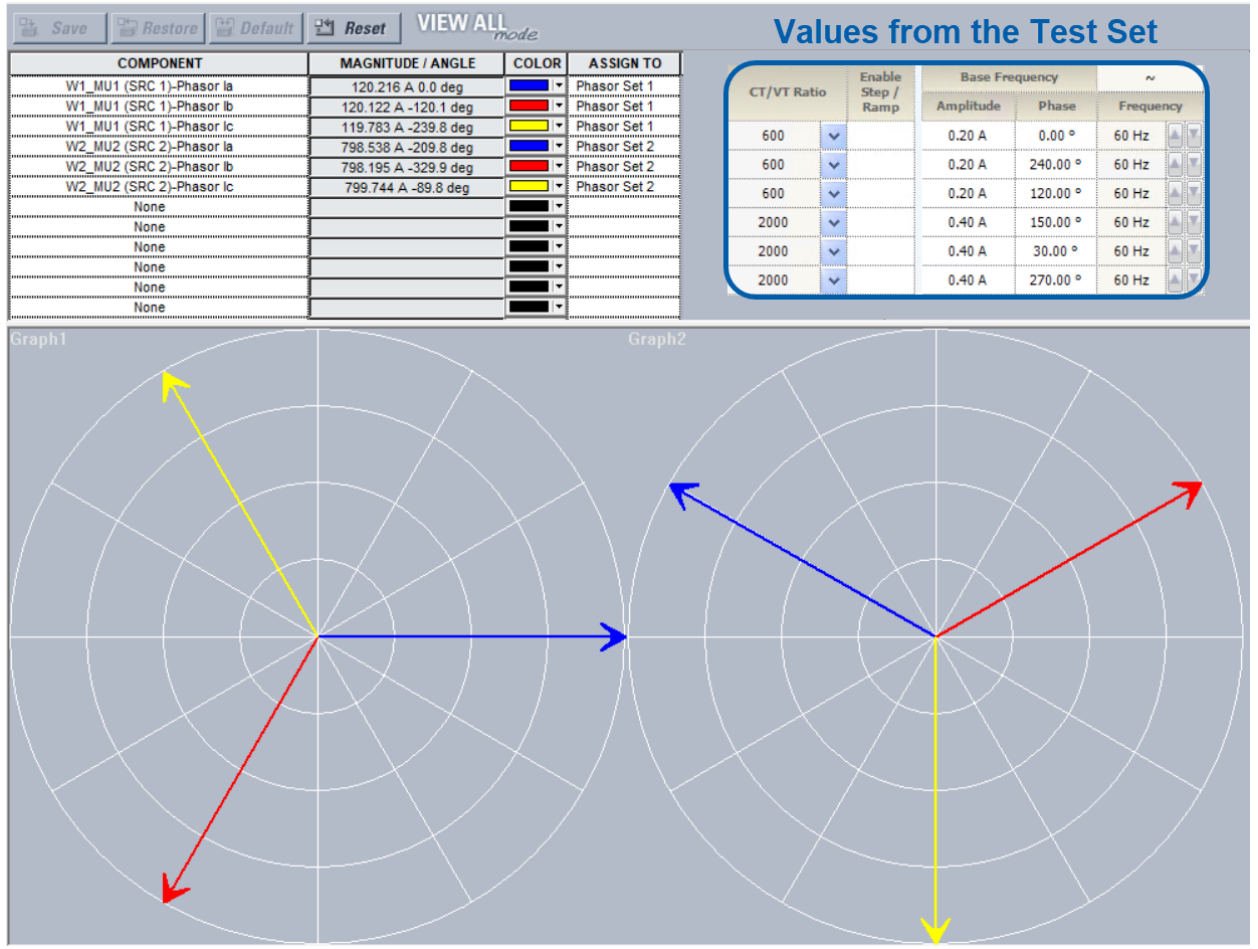

©2026 Doble Engineering, A Doble-Megger Company. All Rights Reserved.

Test Application

PTP Loss Showing a Different Clock Identity

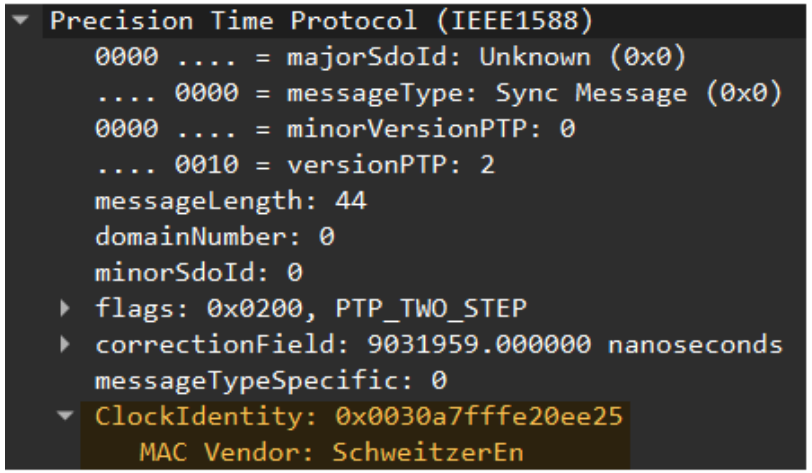

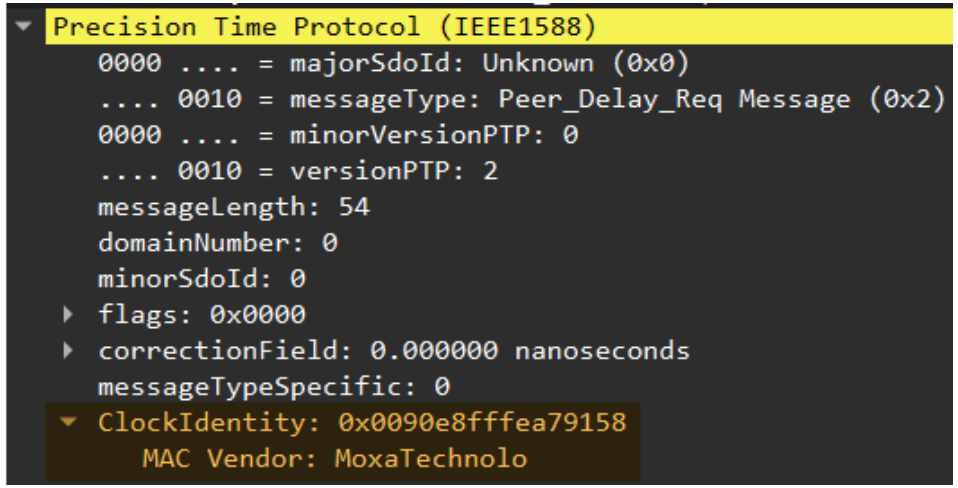

©2026 Doble Engineering, A Doble-Megger Company. All Rights Reserved.

Test Application

A Network Analyzer Tool Detects Loss of Synchronization as the SVs Still Sending the Message as Global

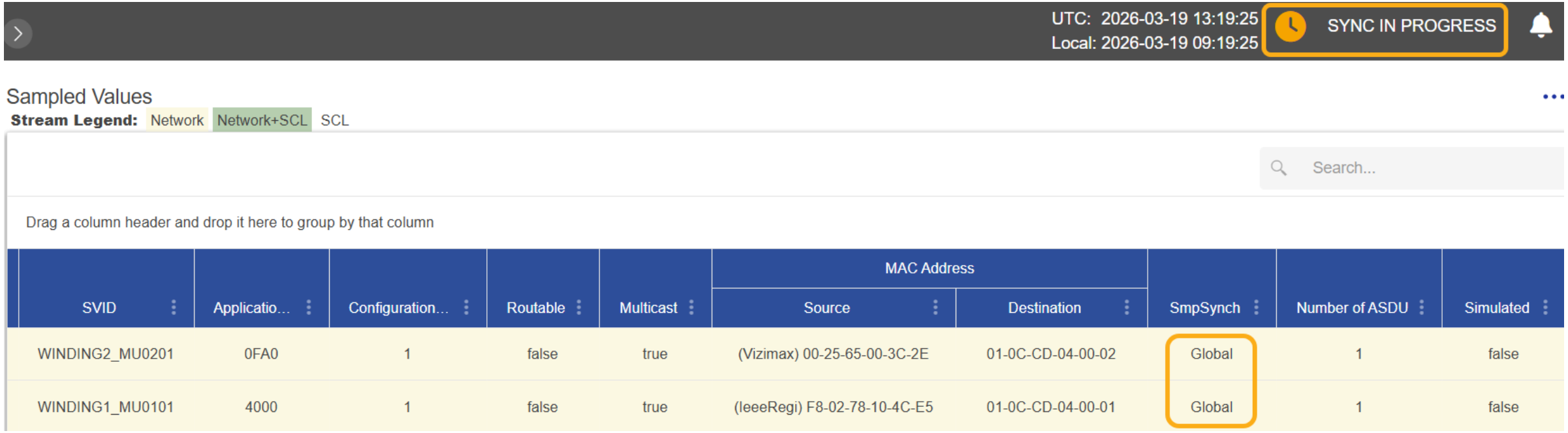

SVID	Applicatio...	Configuration...	Routable	Multicast	MAC Address		SmpSynch	Number of ASDU	Simulated
					Source	Destination			
WINDING2_MU0201	0FA0	1	false	true	(Vizimax) 00-25-65-00-3C-2E	01-0C-CD-04-00-02	Global	1	false
WINDING1_MU0101	4000	1	false	true	(IeeeRegi) F8-02-78-10-4C-E5	01-0C-CD-04-00-01	Global	1	false

©2026 Doble Engineering, A Doble-Megger Company. All Rights Reserved.

Test Application

No Change in Measurement Even the Loss of Synchronization

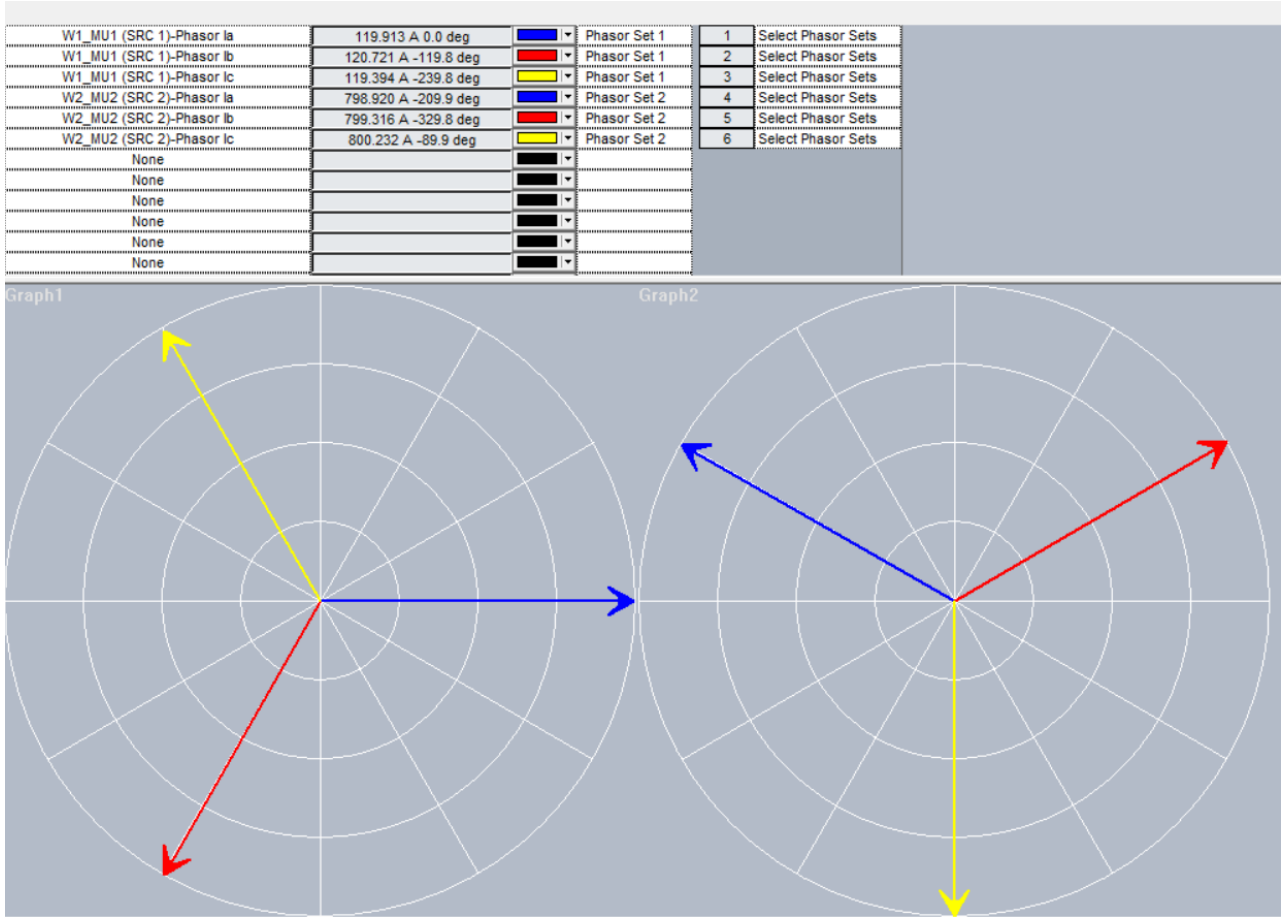

©2026 Doble Engineering, A Doble-Megger Company. All Rights Reserved.

Test Application

Sequence of Events of Internal Fault

18	Mar 19 2026 15:01:32.106111	SV 2 STREAM TRBL ON	
17	Mar 19 2026 15:00:57.920213	SV 1 STREAM TRBL ON	
16	Mar 19 2026 15:00:25.421390	OSCILLOGRAPHY TRIG'D	0 days 0 h : 0 m : 40.557078 s
15	Mar 19 2026 15:00:25.419572	PB PTP FAILURE	
14	Mar 19 2026 15:00:21.779875	PHASE TOC1 DPO C	
13	Mar 19 2026 15:00:21.779875	PHASE TOC1 DPO B	
12	Mar 19 2026 15:00:21.779875	PHASE TOC1 DPO A	
11	Mar 19 2026 15:00:19.796481	PHASE TOC1 PKP C	
10	Mar 19 2026 15:00:19.796481	PHASE TOC1 PKP A	
9	Mar 19 2026 15:00:19.792540	XFMR1 PCNT DIF OP C	
8	Mar 19 2026 15:00:19.792540	XFMR1 PCNT DIF OP B	
7	Mar 19 2026 15:00:19.792540	XFMR1 PCNT DIF OP A	
6	Mar 19 2026 15:00:19.788314	PHASE TOC1 PKP B	0 days 0 h : 0 m : 0.020996 s
5	Mar 19 2026 15:00:19.773756	XFMR1 PCNT DIF PKP B	
4	Mar 19 2026 15:00:19.773756	XFMR1 PCNT DIF PKP A	
3	Mar 19 2026 15:00:19.771544	XFMR1 PCNT DIF PKP C	0 days 0 h : 0 m : 2.408409 s
2	Mar 19 2026 15:00:17.363135	PTP FAILURE	

©2026 Doble Engineering, A Doble-Megger Company. All Rights Reserved.

Test Application

Loss of Synchronization in One SV and IED Blocked

UTC: 2026-03-19 17:40:42
Local: 2026-03-19 13:40:42
SYNC IN PROGRESS

Sampled Values

Stream Legend: Network | Network+SCL | SCL

Search...

Drag a column header and drop it here to group by that column

SVID	Applicatio...	Configuration...	Routable	Multicast	MAC Address		SmpSynch	Number of ASDU	Simulated
					Source	Destination			
WINDING1_MU0101	4000	1		1	(IeeeRegi) F8-02-78-10-4C-E5	01-0C-CD-04-00-01	Unsynchro...	1	false
WINDING2_MU0201	0FA0	1	false	true	(Vizimax) 00-25-65-00-3C-2E	01-0C-CD-04-00-02	Global	1	false

```
IEC61850 Sampled Values
  APPID: 0x4000
  Length: 117
  Reserved 1: 0x0000 (0)
  Reserved 2: 0x0000 (0)
  savPdu
    noASDU: 1
    seqASDU: 1 item
      ASDU
        svID: WINDING1_MU0101
        smpCnt: 2722
        confRev: 1
        smpSynch: none (0)
        smpRate: 80
```

```
IEC61850 Sampled Values
  APPID: 0x0fa0
  Length: 113
  Reserved 1: 0x0000 (0)
  Reserved 2: 0x0000 (0)
  savPdu
    noASDU: 1
    seqASDU: 1 item
      ASDU
        svID: WINDING2_MU0201
        smpCnt: 2722
        confRev: 1
        smpSynch: global (2)
        PhsMeas1
```

Event Number	Date/Time	
6	Mar 19 2026 17:49:32.064310	SV 2 STREAM TRBL ON
5	Mar 19 2026 17:40:03.656610	SV 1 STREAM TRBL ON
4	Mar 19 2026 17:39:30.810732	PB PTP FAILURE
3	Mar 19 2026 17:39:25.089678	OSCILLOGRAPHY TRIG'D
2	Mar 19 2026 17:39:25.087497	PTP FAILURE

©2026 Doble Engineering, A Doble-Megger Company. All Rights Reserved.

Conclusions

- Interoperability testing of multivendor IEC 61850 devices requires a structured methodology emphasizing thorough testing and vendor collaboration.
- Network engineering directly influences protection performance, switch configuration, and redundancy could enhance the system.
- IEC 61850-based current differential protection can remain secure and dependable with properly synchronized SV streams from multiple vendors.
- When MU synchronization is compromised, selective blocking prevents false trips.
- Strong and redundant time synchronization is critical to maintain alignment among MUs.

©2026 Doble Engineering, A Doble-Megger Company. All Rights Reserved.

Any Questions?



©2026 Doble Engineering, A Doble-Megger Company. All Rights Reserved.